INSTRUCTION MANUAL

Orion Atlas™ EQ-G

Equatorial Mount

#24338

ORION
TELESCOPES & BINOCULARS
Providing Exceptional Consumer Optical Products Since 1975

Customer Support (800)-676-1343
E-mail: support@telescope.com
Corporate Offices (831)-763-7000
89 Hangar Way, Watsonville, CA 95076

IN 279 Rev. D 06/13

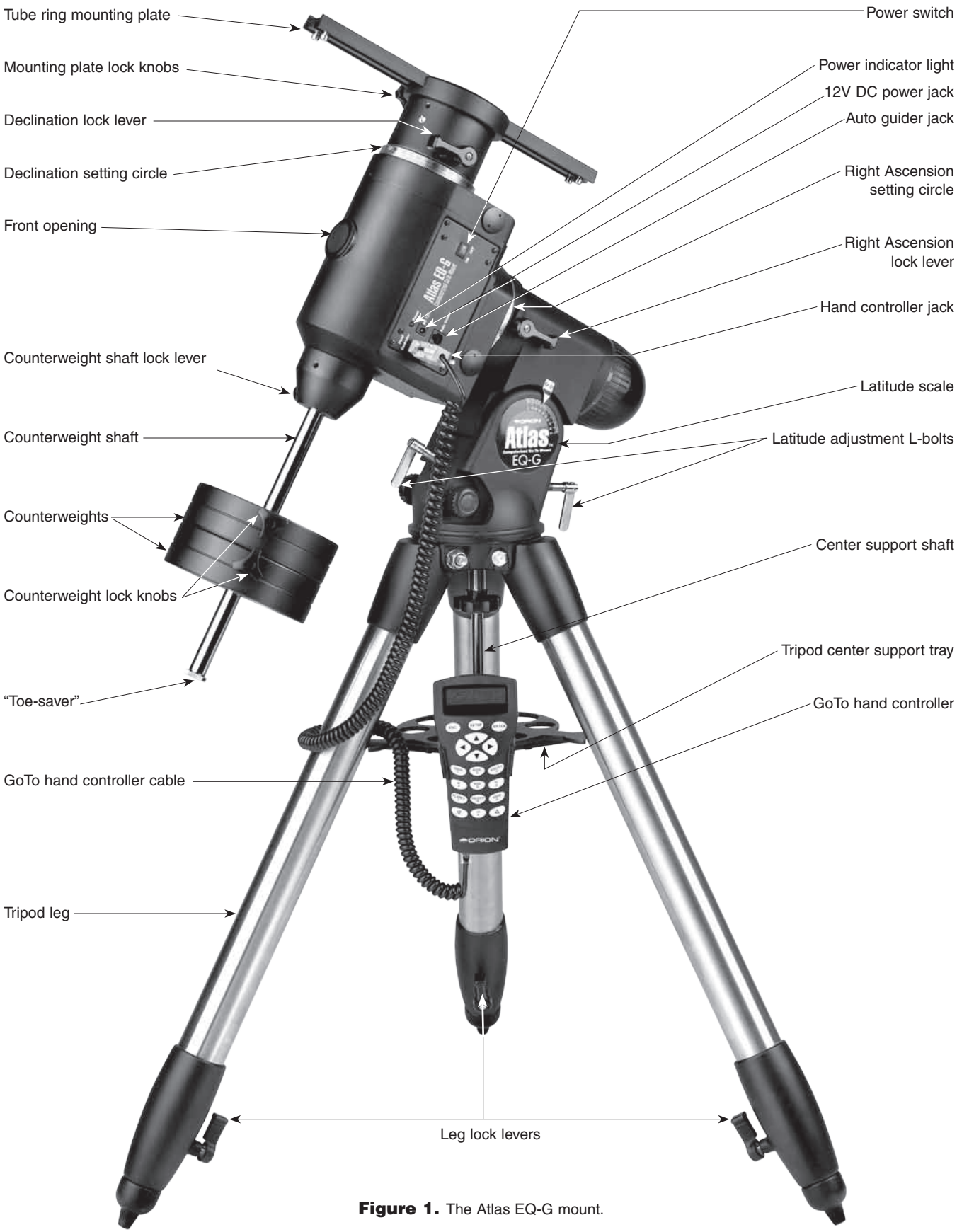

Figure 1. The Atlas EQ-G mount.

Congratulations on your purchase of a quality Orion mount. Your new Atlas EQ-G mount works with many different optical tubes. Designed for astronomical use, the Atlas EQ-G provides a solid, stable foundation for precise navigation of the night sky. The internally housed, dual-axis stepper motors provide smooth slewing and tracking of any celestial object. With a little practice, you'll find that the Atlas EQ-G mount is an invaluable tool for getting the most out of your astronomical observing sessions.

These instructions will help you set up and properly use your equatorial mount. Please read them over thoroughly before getting started.

Table of Contents

1. Unpacking

The entire mount will arrive in three boxes, one containing the tripod, one containing the equatorial mount, and one containing the hand controller. Be careful unpacking the boxes. We recommend keeping the boxes and original packaging. In the event that the mount needs to be shipped to another location, or returned to Orion for warranty repair, having the proper packaging will ensure that your mount will survive the journey intact.

Make sure all the parts in the Parts List are present. Be sure to check the box carefully, as some parts are small. If anything appears to be missing or broken, immediately call Orion Customer Support (800-676-1343) or email support@telescope.com for assistance.

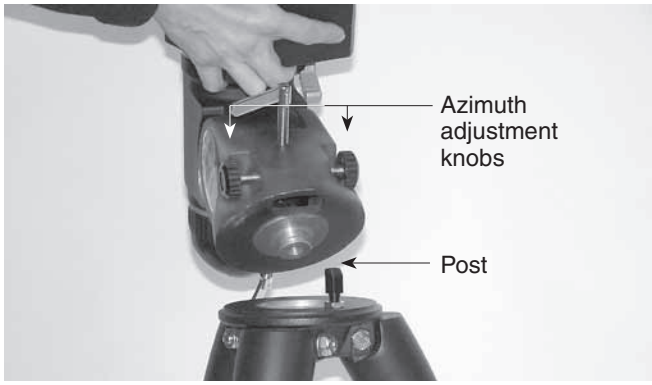

Figure 2. Orient the equatorial head so that the post on the tripod lines up with the azimuth adjustment knobs on the equatorial mount.

2. Parts List

Box 1: Tripod

Qty.	Item
1	Tripod
2	Counterweights (11lbs. each)
1	Tripod center support tray

Box 2: Equatorial Mount

1	Equatorial mount
1	Tube ring mounting plate
1	12V DC Power cable
1	SynScan GoTo hand controller
1	GoTo hand controller cable
1	GoTo hand controller bracket
1	Computer interface cable (RS-232)
1	Wire clip

3. Assembly

Refer to **Figure 1** as needed during the assembly process.

1. Stand the tripod legs upright and spread the legs out as far as they will go. Make certain that the leg lock levers are tightened. Keep the tripod legs at their shortest (fully retracted) length, for now; you can extend them to a more desirable length later, after the mount is fully assembled.
2. Place the base of the equatorial mount onto the tripod head. Orient the equatorial mount so that the post on the tripod head lines up with the azimuth adjustment knobs on the equatorial mount (**Figure 2**). You may need to loosen the azimuth adjustment knobs on the equatorial mount in order to fit the mount onto the tripod head.
3. Thread the center support shaft up through the tripod head and into the bottom of the equatorial mount until tight. Use the upper knob on the center support shaft to do

WARNING: Never look directly at the Sun through your telescope or its finder scope – even for an instant – without a professionally made solar filter that completely covers the front of the instrument, or permanent eye damage could result. Young children should use this telescope only with adult supervision.

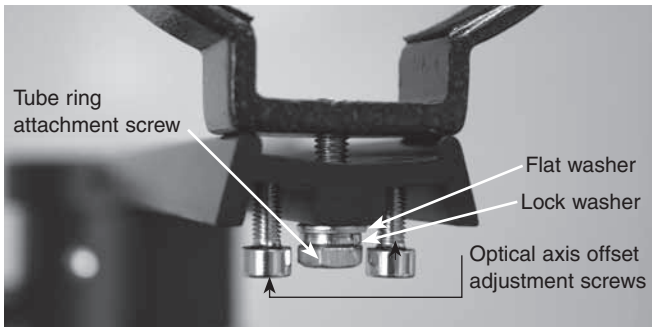

Figure 3. The tube ring mounting plate.

this. The equatorial mount should now be firmly connected to the tripod.

4. Remove the knob and washer from the bottom of the center support shaft. Slide the tripod support tray up the bottom of the central support shaft until the three tray arms are touching the legs of the tripod. The flat side of the support tray should be facing up. Make sure the "V" of each tray arm is against a tripod leg. Place the washer on the center support shaft against the tray, and follow it by threading the knob all the way up the center support shaft until it is tight against the tray. The tripod support tray provides additional stability for the tripod, and holds up to five 1.25" eyepieces and two 2" eyepieces.
5. Loosen the counterweight shaft lock lever and fully extend the counterweight shaft. Retighten the lock lever.
6. Remove the knurled "toe saver" retaining screw on the bottom of the counterweight shaft and slide both counterweights onto the shaft. Make sure the counterweight lock knobs are adequately loosened to allow the counterweight shaft to pass through the hole. Position the counterweights about halfway up the shaft and tighten the lock knobs. Replace the toe saver at the end of the bar. The toe saver prevents the counterweights from falling on your foot if the lock knobs happen to come loose.

Your Atlas EQ-G mount is now fully assembled and should resemble **Figure 1** except for the hand controller, which is covered in the separate SynScan GoTo Hand Controller manual.

4. Attaching a Telescope

The Atlas EQ-G equatorial mount is designed to hold telescope tubes weighing up to approximately 40 lbs. For heavier telescopes, the mount may not provide sufficient stability for steady imaging. Any type of telescope can be mounted on the Atlas EQ-G, including refractors, Newtonian reflectors, and catadiotropics, provided a set of tube rings is available to couple the tube to the mount. Orion sells a variety of telescope tube rings. Please visit our website at OrionTelescopes.com for details.

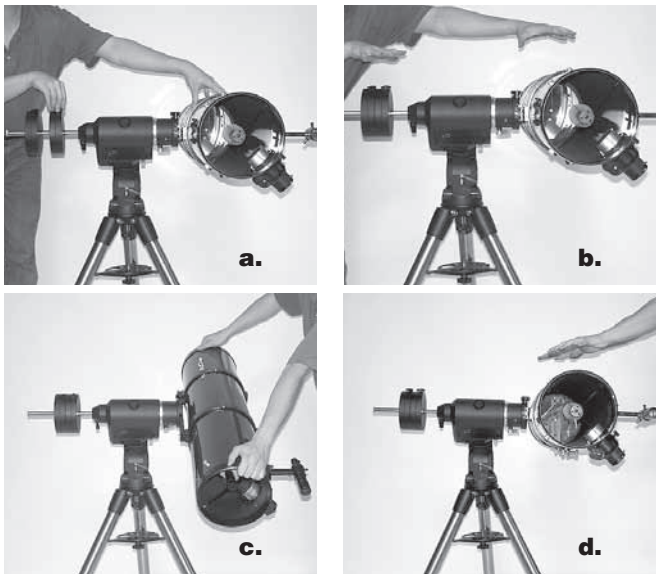

Figure 4. Proper operation of the equatorial mount requires that the telescope tube be balanced on the R.A. and Dec. axes. (a) With the R.A. lock lever released, slide the counterweights down the counterweight shaft until they just counterbalance the telescope tube. (b) When you let go with both hands, the tube should not drift up or down. (c) With the Dec. lock lever released, loosen the tube ring lock clamps a few turns and slide the telescope forward or back in the tube rings. (d) When the tube is balanced about the Dec. axis, it will not move when you let go.

1. Attach the tube mounting rings to the tube ring mounting plate using the screws that come with the tube rings. The screws should go through the center holes in the ends of the mounting plate and rethread into the tube rings. Note that the side of the mounting plate with the central "groove" will be facing up (**Figure 3**). Use a small wrench to secure the tube rings to the mounting plate.

Note: The tube ring mounting plate included with the Atlas EQ-G includes four optical axis offset adjustment screws; these are the socket head cap screws located at each corner of the mounting plate. These adjustment screws will be explained further in Appendix A. For now, confirm that all four adjustment screws are sufficiently unthreaded so that the ends of their threaded shafts are flush with the top surface of the tube ring mounting plate.

*Note: The optical axis offset adjustment screws should be oriented so that the threaded shaft extends upward through the top surface of the tube ring mounting plate. If the tube ring mounting plate arrives with the optical axis offset screws installed backwards, reverse their orientation before proceeding (**Figure 3**).*

2. Loosen the black mounting plate lock knobs on the top of the equatorial mount. Place the mounting plate, with the tube rings attached, in the slot on top of the equatorial

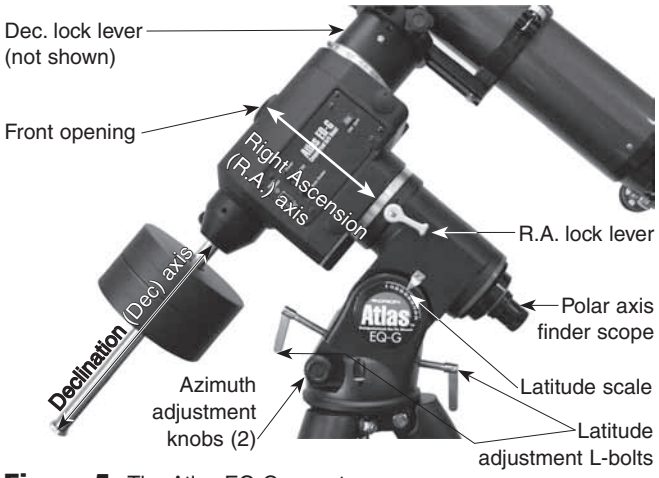

Figure 5. The Atlas EQ-G mount.

mount. Position the mounting plate so that it is centered in the slot. Re-tighten the mounting plate lock knobs until the plate is secure.

3. Open the tube rings and lay the telescope optical tube in the rings at about the midpoint of the tube's length. Rotate the tube so that the focuser is at a convenient height for viewing. Close the tube rings and tighten them.

Note: The Atlas EQ-G mount is very heavy. Alone it weighs 54 lbs. With a large optical tube and counterweights it can easily weigh over 100 lbs. Keep this in mind when moving the telescope even small distances, and use assistance when needed. It is best to remove the optical tube and counterweights when moving the mount.

Note: Some telescope optical tubes (specifically Schmidt-Cassegrains and Maksutov-Cassegrains) have a mounting plate connected directly to the tube. For these telescopes, optional tube rings are not required. Simply follow step 2 (above) to connect the telescope to the mount.

5. Balancing a Telescope

To ensure smooth movement of a telescope on both axes of the equatorial mount, it is imperative that the optical tube is properly balanced. We will first balance the telescope with respect to the right ascension (R.A.) axis, then the declination (Dec.) axis.

1. Keeping one hand on the telescope optical tube, loosen the R.A. lock lever. Make sure the Dec. lock lever is locked, for now. The telescope should now be able to rotate freely about the right ascension axis. Rotate it until the counterweight shaft is parallel to the ground (i.e., horizontal).
2. Now loosen both counterweight lock knobs and slide the weights along the shaft until they exactly counterbalance the telescope (**Figure 4a**). That's the point at which the shaft remains horizontal even when you let go with both hands (**Figure 4b**). If the telescope refuses to balance than you have either too much or too little counterweight. Remove a counterweight, or add optional counterweights if needed.
3. Retighten the counterweight lock knobs. The telescope is now balanced on the right ascension axis.
4. To balance the telescope on the declination axis, first tighten the R.A. lock lever, with the counterweight shaft still in the horizontal position.
5. With one hand on the telescope optical tube, loosen the Dec. lock lever. The telescope should now be able to rotate freely about the declination axis.
6. Loosen the knurled ring clamps on the tube rings a few turns, until you can slide the telescope tube forward and back inside the rings (this can be aided by using a slight twisting motion on the optical tube while you push or pull on it) (**Figure 4c**).
7. Position the telescope in the tube rings so it remains horizontal when you carefully let go with both hands. This is the balance point for the optical tube with respect to the Dec. axis (**Figure 4d**).
8. Retighten the knurled ring clamps.

The telescope is now balanced on both axes. When you loosen the lock lever on one or both axes and manually point the telescope, it should move without resistance and should not drift from where you point it.

6. Setting Up and Using the Equatorial Mount

When you look at the night sky, you no doubt have noticed that the stars appear to move slowly from east to west over time. That apparent motion is caused by the Earth's rotation (from west to east). An equatorial mount (**Figure 5**) is designed to compensate for that motion, allowing you to easily "track" the movement of astronomical objects, thereby keeping them from drifting out of your telescope's field of view while you're observing.

This is accomplished by slowly rotating the telescope on its right ascension (R.A.) axis, using the built in motor drive. But first the R.A. axis of the mount must be aligned with the Earth's rotational (polar) axis—a process called polar alignment.

Polar Alignment

For Northern Hemisphere observers, approximate polar alignment is achieved by pointing the mount's right ascension axis at the North Star, or Polaris. It lies within 1° of the north celestial pole (NCP), which is an extension of the Earth's rotational axis out into space. Stars in the Northern Hemisphere appear to revolve around the NCP.

To find Polaris in the sky, look north and locate the pattern of the Big Dipper (**Figure 6**). The two stars at the end of the "bowl" of the Big Dipper point right to Polaris.

Observers in the Southern Hemisphere aren't so fortunate to have a bright star so near the south celestial pole (SCP). The star Sigma Octantis lies about 1° from the SCP, but it is barely visible with the naked eye (magnitude 5.5).

For general visual observation, an approximate polar alignment is sufficient.

1. Level the equatorial mount by adjusting the length of the three tripod legs.
2. There are two latitude adjustment L-bolts (see **Figure 5**); loosen one while tightening the other. By doing this you will adjust the latitude of the mount. Continue adjusting the mount until the pointer on the latitude scale is set at the latitude of your observing site. If you don't know your latitude, consult a geographical atlas to find it. For example, if your latitude is 35° North, set the pointer to 35. The latitude setting should not have to be adjusted again unless you move to a different viewing location some distance away.
3. Loosen the Dec. lock lever and rotate the telescope's optical tube until it is parallel with the right ascension axis, as it is in **Figure 5**.
4. Move the tripod so the telescope tube and right ascension axis point roughly at Polaris. If you cannot see Polaris directly from your observing site, consult a compass and rotate the tripod so the telescope points north.

The equatorial mount is now polar aligned for casual observing. More precise polar alignment is recommended for astrophotography. For this we recommend using the polar axis finder scope.

From this point on in your observing session, you should not make any further adjustments to the latitude of the mount, nor should you move the tripod. Doing so will undo the polar alignment. The telescope should be moved only about its R.A. and Dec. axes.

The Polar Axis Finder Scope

The Atlas EQ-G mount comes with a polar axis finder scope (**Figure 7**) housed inside the right ascension axis of the mount. When properly aligned and used, it makes accurate polar alignment quick and easy to do. Unthread the cover at the rear of the mount's right ascension axis and remove the cap on the front opening of the equatorial mount (**Figure 5**) to view through the polar axis finder scope.

Alignment of the Polar Axis Finder Scope

1. Loosen the Dec. lock lever and rotate the optical tube about the declination axis until you have a clear view through the polar axis finder scope (**Figure 8**). Tighten the Dec. lock lever.
2. Look through the polar finder at a distant object (during the day) and center it in the crosshairs. You may need to adjust the latitude adjustment L-bolts and the tripod position to do this. Focus the polar finder by rotating the eyepiece.
3. Rotate the mount 180° about the R.A. axis. It may be convenient to remove the counterweights and optical tube before doing this.
4. Look through the polar finder again. Is the object being viewed still centered on the crosshairs? If it is, then no further adjustment is necessary. If not, then look through the polar finder while rotating the mount about the R.A. axis. You will notice that the object you have previously centered moves in a circular path. Use the three alignment set-screws on the polar axis finder (**Figure 7**) to redirect the crosshairs of the polar finder to the apparent center of this circular path.
5. Repeat this procedure until the position that the crosshairs point to does not rotate off-center when the mount is rotated in R.A.

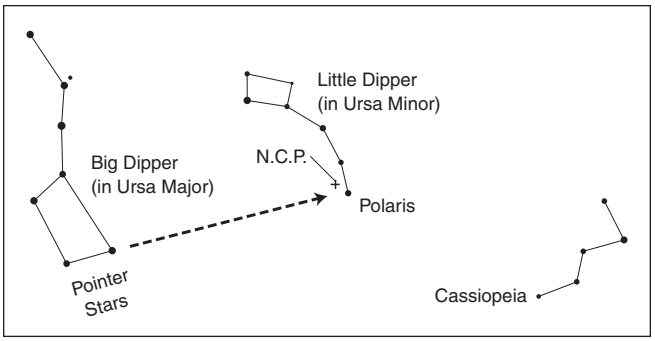

Figure 6. To find Polaris in the night sky, look north and find the Big Dipper. Extend an imaginary line from the two "Pointer Stars" in the bowl of the Big Dipper. Go about five times the distance between those stars and you'll reach Polaris, which lies within 1° of the north celestial pole (NCP).

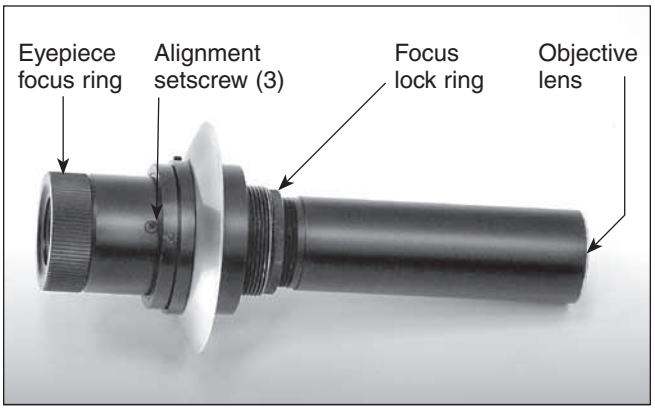

Figure 7. The polar axis finder scope.

The polar axis finder scope is now ready to be used. When not in use, replace the plastic protective cover to prevent the polar finder from getting bumped.

Using the Polar Axis Finder Scope

The reticle of the polar axis finder scope for the Atlas EQ-G has a tiny star map printed on it that makes precise polar

Figure 8. The optical tube must be rotated about the declination axis in order to view through the polar axis finder.

alignment quick and easy. To polar align the mount using the polar axis finder scope, follow these instructions:

1. Approximately polar-align the mount as outlined in the procedure above.
2. Loosen the Dec. lock lever and rotate the optical tube on the declination axis so the tube is at a 90° angle to the right ascension axis (**Figure 8**). Tighten the Dec. lock lever.
3. Focus the polar finder by rotating the eyepiece. Now, sight Polaris in the polar axis finder scope. If you have followed the approximate polar alignment procedure accurately, Polaris will probably be within the field of view. If not, move the tripod left-to-right, and adjust the latitude up-and down until Polaris is somewhere within the field of view of the polar axis finder scope.
4. The mount has a built-in illuminator that allows you to see the reticle pattern in the polar axis finder scope at night. Simply turn on the power switch on the Atlas EQ-G mount (see "Powering the Atlas EQ-G Mount") and the polar axis finder scope reticle will be illuminated. Note the constellation Cassiopeia and the Big Dipper in the reticle. They do not appear in scale, but they indicate the general positions of Cassiopeia and the Big Dipper relative to the north celestial pole (which is indicated by the cross at the center of the reticle). Rotate the reticle so the constellations depicted match their current orientation in the sky when viewed with the naked eye. To do this, release the R.A. lock lever and rotate the main telescope around the R.A. axis until the reticle is oriented with sky. For larger optical tubes, you may need to remove the tube from the mount to prevent it from bumping into the mount. Once the reticle is correctly oriented, use the right ascension lock lever to secure the mount's position.
5. Now use the azimuth adjustment knobs (**Figure 2**) and the latitude adjustment L-bolts (**Figure 5**) on the mount to position the star Polaris inside the tiny circle marked "Polaris" on the finder's reticle. You must first loosen the knob underneath the equatorial mount on the center support shaft to use the azimuth adjustment knobs. Once Polaris is properly positioned within the reticle, you are precisely polar aligned. Retighten the knob underneath the equatorial mount.

If you do not have a clear view of Polaris from your observing site, you will not be able to use the polar-axis finder to precisely polar align the telescope.

Note: From this point on in your observing session, you should not make any further adjustments in the azimuth or the latitude of the mount, nor should you move the tripod. Doing so will undo the polar alignment. The telescope should be moved only about its right ascension and declination axes.

Additional Note Regarding Focusing the Polar Axis Finder Scope

The polar axis finder scope is normally focused by simple rotation of the eyepiece focus ring. However, if after adjusting the focus ring you find that the image of the reticle is sharp, but the stars are out of focus, then you must adjust the focus of the polar axis finder's objective lens. To do this, first remove the polar axis finder from the mount by unthreading it. Look through the polar axis finder at a star (at night) or distant object at least 1/4 mile away (during daylight). Use the eyepiece focus ring to bring the reticle into sharp focus. Now, loosen the focus lock ring (**Figure 7**) and thread the entire objective end of the finder inward or outward until images appear sharp. Re-tighten the focus lock ring. Once the polar axis finder's objective lens is focused, it should not need to be adjusted again.

Confused About Pointing the Telescope?

Beginners occasionally experience some confusion about how to point the telescope overhead or in other directions. In **Figure 1** the telescope is pointed north as it would be during polar alignment. The counterweight shaft is oriented downward. But it will not look like that when the telescope is pointed in other directions. Let's say you want to view an object that is directly overhead, at the zenith. How do you do it?

DO NOT make any adjustment to the latitude adjustment L-bolts. That will spoil the mount's polar alignment. Remember, once the mount is polar aligned, the telescope should be moved only on the R.A. and Dec. axes. To point the scope overhead, first loosen the R.A. lock lever and rotate the telescope on the right ascension axis until the counterweight shaft is horizontal (parallel to the ground). Then loosen the Dec. lock lever and rotate the telescope until it is pointing straight overhead. The counterweight shaft is still horizontal. Then retighten both lock levers.

What if you need to aim the telescope directly north, but at an object that is nearer to the horizon than Polaris? You can't do it with the counterweights down as pictured in **Figure 1**. Again, you have to rotate the scope in right ascension so that the counterweight shaft is positioned horizontally. Then rotate the scope in declination so it points to where you want it near the horizon.

To point the telescope directly south, the counterweight shaft should again be horizontal. Then you simply rotate the scope on the declination axis until it points in the south direction.

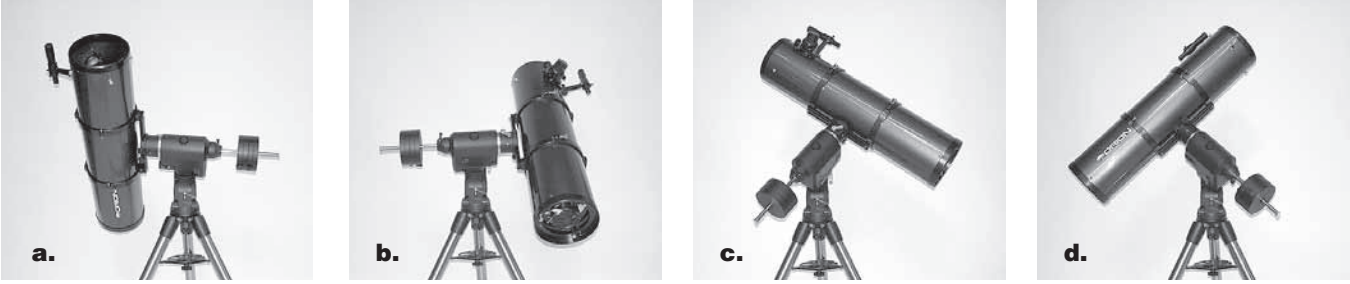

Figure 9. These illustrations show the telescope pointed in the four cardinal directions. (a) north, (b) south, (c) east, (d) west. Note that the tripod and mount have not been moved; only the telescope has been moved on the its R.A. and Dec. axes.

To point the telescope to the east or west, or in other directions, you rotate the telescope on its right ascension and declination axes. Depending on the altitude of the object you want to observe, the counterweight shaft will be oriented somewhere between vertical and horizontal.

Figure 9 illustrates how the telescope will look when pointed at the four cardinal directions: north (**Figure 9a**), south (**Figure 9b**), east (**Figure 9c**) and west (**Figure 9d**).

The key things to remember when pointing the telescope are that a) you only move it in right ascension and declination, not in azimuth or latitude (altitude), and b) the counterweight and shaft will not always appear as it does in **Figure 1**. In fact it almost never will!

Powering the Atlas EQ-G Mount

The Atlas EQ-G should be powered by an 11V to 15V DC power supply (tip positive) capable of producing continuous current of a minimum 2 amps. We recommend using a portable rechargeable battery, like the Dynamo Pro available from Orion.

If you are using a field battery like the Orion Dynamo Pro, use the 12V DC power cable supplied with your mount (male cigarette lighter plug on one end, standard 12V DC power plug on other end) to connect the battery to the 12V DC power jack on the mount. Make sure the Dynamo's power switch is in the "on" position after connecting. Then, to turn the mount (and GoTo hand controller) on, simply press the switch on the mount so it is in the "on" position.

Note: The power indicator LED on the mount (near the power switch) will begin to flash when the battery power is low. When the battery power is extremely low, the LED will flash rapidly. Recharge or replace the battery as needed.

7. The SynScan GoTo Hand Controller

The Atlas EQ-G mount equipped with the GoTo hand controller provides easy, computerized location of thousands of night sky objects such as planets, nebulae, star clusters, galaxies, and more for viewing through your telescope. The SynScan GoTo Hand Controller and internal dual-axis motors allow you to automatically point your telescope at a specific object, or tour the skies with pushbutton simplicity. The user-friendly menu allows automatic slewing to over 42,000 objects. Even inexperienced astronomers will find themselves quickly mastering the variety of features the GoTo hand controller offers in just a few observing sessions.

For detailed information about the SynScan GoTo Hand Controller, see the manual for the SynScan.

8. Technical Specifications

Mount:	German equatorial
Tripod:	Steel
Weight:	54 lbs.
Counterweights:	Quantity 2, 11 lbs. each
Polar axis latitude adjustment:	10° to 65°
Polar axis finder scope:	Included, illuminator built into mount
Motor drives:	Dual-axis, GoTo computerized, internally housed
Operation:	Northern or Southern hemisphere
Power requirement:	12V DC, 2A (tip positive)
Motor type and resolution:	Microstep driven 1.8° stepper motors
Resolution:	0.144 arc sec (or 9,024,000 steps/rev)
Gear ratio:	705

This device complies with Part 15 of the FCC Rules. Operation is subject to the following two conditions: (1) this device nay not cause harmful interference, and (2) this device must accept any interference received, including interference that may cause undesired operation.

Changes of modifications not expressly approved by the party responsible for compliance could void the user's authority to operate the equipment.

Note: This equipment has been tested and found to comply with the limits for a Class B digital device, pursuant to Part 15 of the FCC Rules. These limits are designed to provide reasonable protection against harmful interference in a residential installation. This equipment generates, uses and can radiate radio frequency energy and, if not installed and used

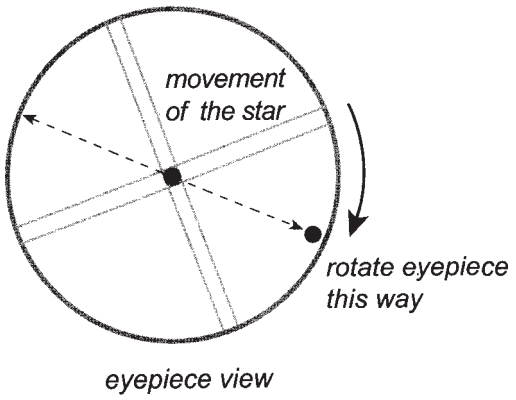

Figure 10. Aligning the R.A. motion of the star with the crosshairs.

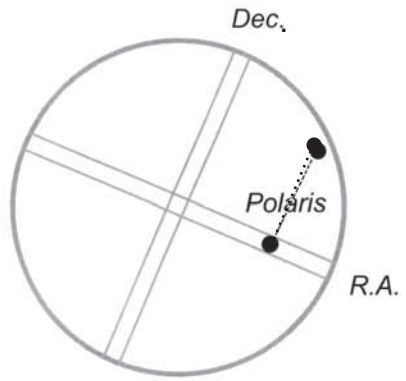

Figure 11. Adjust the telescope in Dec. (with the hand controller) to place the star on the R.A. crosshair.

in accordance with the instructions, may cause harmful interference to radio communications. However, there is no guarantee that interference will no occur in a particular installation. If this equipment does cause harmful interference to radio or television reception, which can be determined by turning the equipment off and on, the user is encouraged to try to correct the interference by one or more of the following measures:

- *Reorient or relocate the receiving antenna.*
- *Increase the separation between the equipment and receiver.*
- *Connect the equipment into an output on a circuit different from that to which the receiver in connected.*
- *Consult the dealer or an experienced radio/TV technician for help.*

A shielded cable must be used when connecting a peripheral to the serial ports.

Appendix: Enhancing the Pointing Accuracy

The Atlas EQ-G produces pointing accuracy and tracking accuracy adequate for most applications. If higher precision is required, “cone” error calibration may be necessary.

Cone Error Calibration

“Cone” error is a common inaccuracy found on all German equatorial mount designs. Cone error results from the optical axis of the telescope not being aligned to the R.A. axis of the mount. This affects the pointing accuracy of the Atlas EQ-G. Three-star alignment automatically compensates for some of the cone error, but pointing accuracy will be optimized by mechanically minimizing the cone error. The following calibration procedure should be performed before the initial use of the telescope and periodically thereafter to ensure peak accuracy.

Testing for Cone Error

This test is performed at night using two bright stars located on opposite hemispheres of the night sky. Confirm that the telescope is properly polar-aligned using the polar axis finder scope. Perform the one-star alignment using an eastern star as the alignment star (see “One-Star Alignment”). After completing the star alignment, choose a bright star in the western sky from the Atlas EQ-G object database and press **ENTER** to slew the telescope to the star. If the optical axis is perfectly aligned to the R.A. axis, the telescope will accurately put the star in the center of the eyepiece. This shows that there is no cone error in your telescope setup and you will not need to perform the calibration. It is acceptable if the star is slightly off-center as long as it appears in the eyepiece field of view and reasonable close to the center. Many factors determine the pointing accuracy of the Atlas EQ-G. Incorrect star alignment, loose R.A. or Dec. lock-knobs, or cone error. If the Atlas EQ-G puts the star outside the eyepiece field of view, you need to determine which of these factors is causing the pointing inaccuracy. To determine if the inaccuracy is caused by cone error, simply move the telescope about the R.A. axis by pressing the Left or Right direction button. If the star can be moved into the eyepiece field of view without adjusting the Dec. axis, it is likely that cone error exists in your telescope setup.

Calibration Procedure

1. Insert an illuminated reticle eyepiece (not supplied) into the focuser (or diagonal) of the telescope. Confirm the telescope is properly set up and balanced, and the finderscope is aligned with the optical tube of the telescope.

Note: Steps 2 to 4 are to identify R.A. and DEC movements in the reticle eyepiece. If you are already familiar with the movements, proceed to step 5.

2. Find a bright star and position the telescope so the star is centered in the eyepiece field of view.
3. Look into the eyepiece. Move the telescope about the R.A. axis using the R.A. direction buttons on the hand controller while carefully observing the movement of the star.
4. Keep moving the telescope about the R.A. axis back and forth to keep the star within the eyepiece field of view. Rotate the eyepiece in the focuser (or diagonal) until the

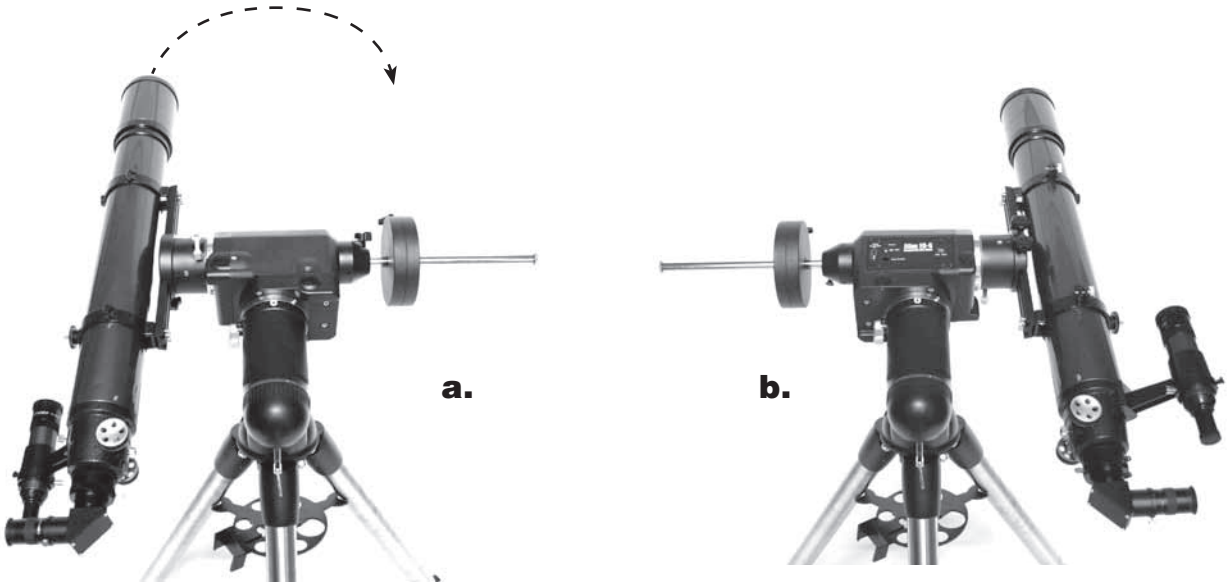

Figure 12. Rotate the telescope 180° about the R.A.axis.

movement of the star becomes parallel to one of the illuminated crosshairs (**Figure 10**). This crosshair will represent R.A. movement in the course of this procedure, and the perpendicular crosshair will represent Dec. movement. Tighten the set screws to secure the eyepiece in position. Make sure the eyepiece will remain stationary while the telescope is moved.

5. Point the telescope North and set the latitude scale to your local latitude using the altitude adjustment L-bolts. Alternatively, place Polaris in the polar axis finder scope if your polar axis finder scope is accurately aligned with the mount.
6. Loosen the R.A. lock knob and rotate the telescope about the R.A. axis until the counterweight shaft is parallel to the ground (as shown in **Figure 12a**).
7. Using the Dec. direction button on the hand controller, adjust the telescope in Dec. so Polaris lies on the R.A. crosshairs of the illuminated reticle eyepiece (**Figure 11**).
8. Without moving the R.A. axis, adjust the azimuth adjustment knobs (**Figure 2**) to orient Polaris in the center of the eyepiece field of view. Adjustment in Dec. axis using the hand controller may be necessary.
9. Loosen the R.A. lock knob and carefully rotate the telescope 180° about the R.A. axis (**Figure 12**) This should be done as accurately as possible referencing the R.A. mechanical setting circle.
10. Adjust the position of the telescope in the Dec. axis so Polaris lies on the R.A. crosshairs of the illuminated reticle eyepiece.
11. Carefully push the telescope in horizontal motion while observing the movement of Polaris in the eyepiece field of view (**Figure 13**). This will determine which direction (left or right) moves Polaris closer to the center of the eyepiece field of view.
12. Carefully and gently loosen both the tube ring attachment screws (**Figure 3**) by a couple of turns.
13. Make adjustments to the optical axis offset adjustment screws (the socket head cap screws located at each corner of the mounting plate (**Figure 3**) according to the

Figure 13. gently push the telescope horizontally to determine direction of optical axis offset.

results of step 11. If Polaris moves toward the center when the telescope is pushed as indicated in **Figure 13**, loosen the adjustment screws near the front of the tube and tighten the adjustment screws closer to the back of the tube (**Figure 14**). If Polaris moves away from the center when the telescope is pushed as in **Figure 13**, loosen the adjustment screws near the back of the tube and tighten the adjustment screws closer to the front of the tube (**Figure 14**). Look into the eyepiece. Adjust the adjustment screws just enough to place Polaris HALF the distance back to the center of the illuminated reticle eyepiece (**Figure 15**).

14. Repeat these steps until Polaris remains in the center of the eyepiece field of view, or moves slightly around the center, when the mount is rotated about the R.A. axis.

Note: This calibration method can be applied to both refracting and reflecting telescope designs. Differences in the optical path of telescopes do not affect how the telescope tube and tube rings should be adjusted on the mounting plate.

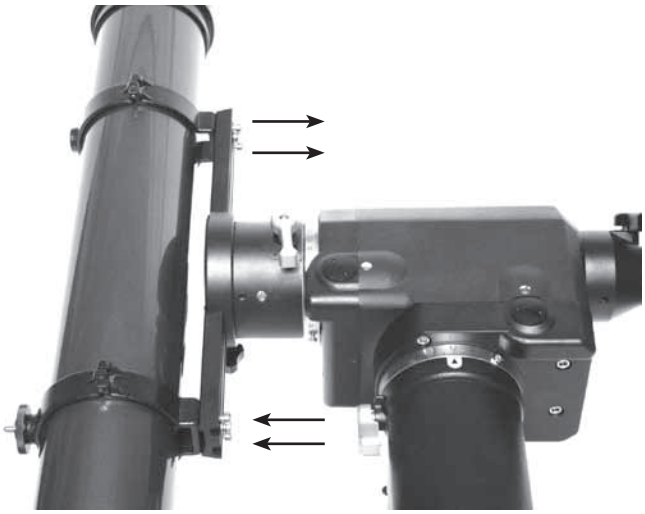

Figure 14a. Adjust the optical axis offset screws this way if Polaris moves toward the center of the eyepiece when the tube is pushed as in Figure 19.

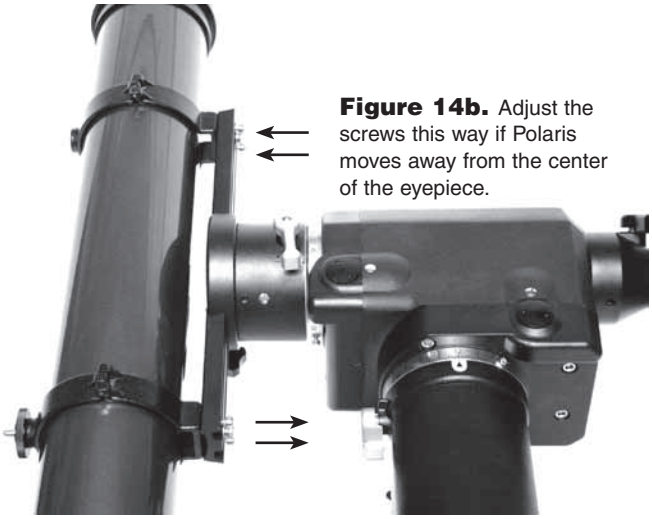

Figure 14b. Adjust the screws this way if Polaris moves away from the center of the eyepiece.

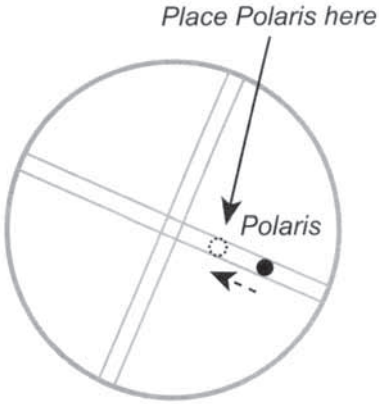

Figure 15. Using the optical axis offset screws move Polaris halfway to the eyepiece's center.

One-Year Limited Warranty

This Orion product is warranted against defects in materials or workmanship for a period of one year from the date of purchase. This warranty is for the benefit of the original retail purchaser only. During this warranty period Orion Telescopes & Binoculars will repair or replace, at Orion's option, any warranted instrument that proves to be defective, provided it is returned postage paid. Proof of purchase (such as a copy of the original receipt) is required. This warranty is only valid in the country of purchase.

This warranty does not apply if, in Orion's judgment, the instrument has been abused, mishandled, or modified, nor does it apply to normal wear and tear. This warranty gives you specific legal rights. It is not intended to remove or restrict your other legal rights under applicable local consumer law; your state or national statutory consumer rights governing the sale of consumer goods remain fully applicable.

For further warranty information, please visit **www.OrionTelescopes.com/warranty.**

Orion Telescopes & Binoculars

Corporate Offices: 89 Hangar Way, Watsonville CA 95076 - USA

Customer Support: **www.OrionTelescopes.com/contactus**