INSTRUCTION MANUAL

Orion® 6" f/4 Newtonian Astrograph

#10269

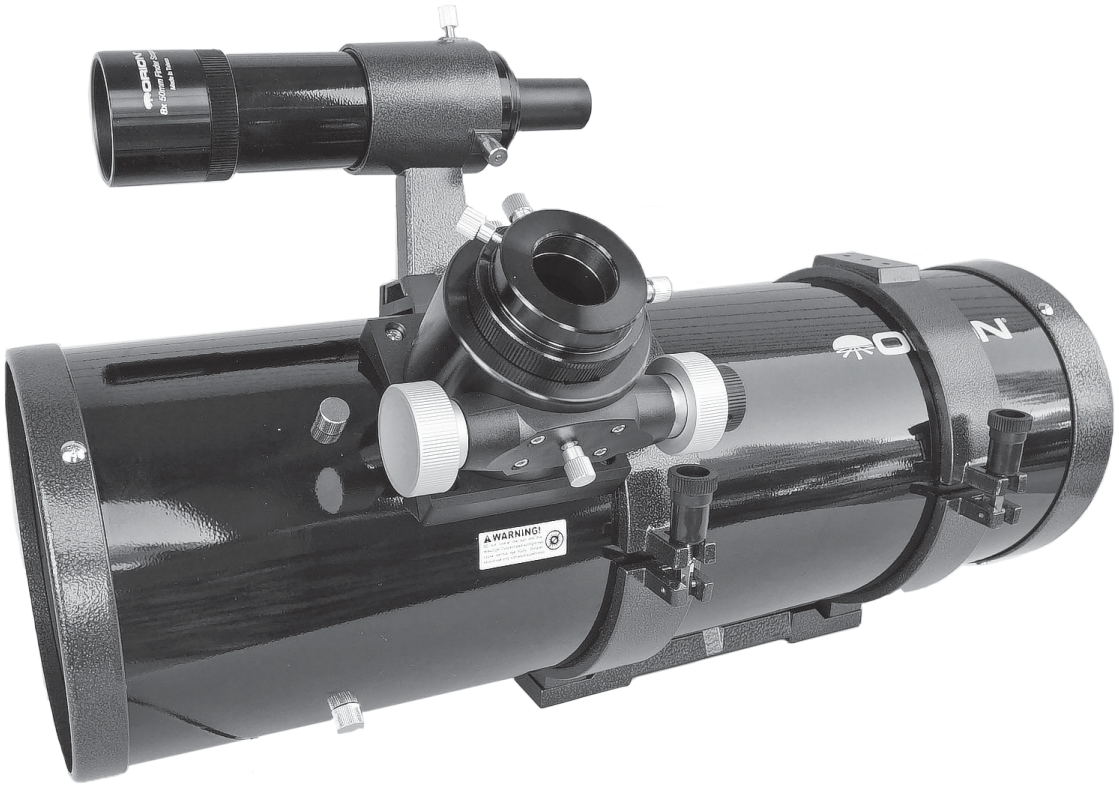

ORION
TELESCOPES & BINOCULARS
AN EMPLOYEE-OWNED COMPANY

Corporate Offices: 89 Hangar Way, Watsonville CA 95076 - USA
Toll Free USA & Canada: (800) 447-1001
International: +1(831) 763-7000
Customer Support: support@telescope.com

IN 575 Rev. A 09/16

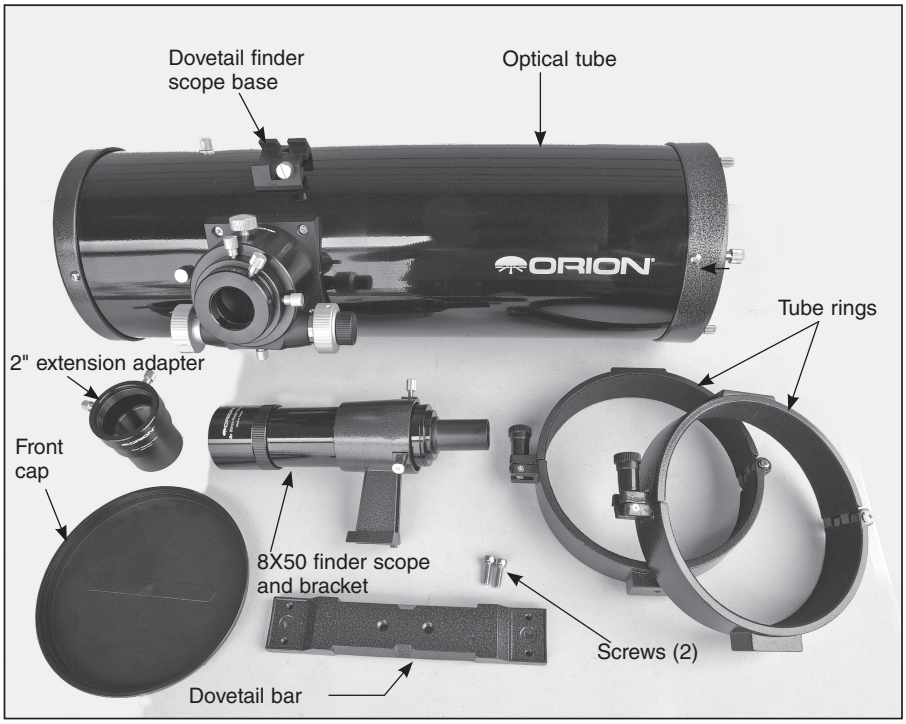

Figure 1. Included components of the 6" f/4 Newtonian Astrograph. (Allen wrench not shown.)

Table of Contents

Introduction

Congratulations on your purchase of the Orion 6" f/4 Newtonian Astrograph! This compact, short-focal-length reflector telescope features high-quality parabolic optics, a 2" dual-speed Crayford focuser, and excellent mechanical construction. It is optimized for astrophotography with DSLR and astronomical CCD imaging cameras, but can also provide excellent visual views with optional eyepieces.

This instruction manual will help you to set up and properly use your telescope. Please read it through completely before attempting to use the scope and its included accessories.

WARNING: ***Never look directly at the Sun with the naked eye or with a telescope – unless you have a proper solar filter installed over the front of the telescope! Otherwise, permanent, irreversible eye damage may result.***

Parts List

- Optical tube assembly
- Optical tube dust cap
- 8x50 crosshair finder scope
- Finder scope dovetail bracket with rubber O-ring
- Pair of hinged tube rings
- Dovetail mounting bar
- Screws for tube ring attachment (x2)
- 2" to 1.25" eyepiece holder
- 2" extension adapter
- Allen wrench
- Starry Night Special Edition digital download

We recommend keeping the original shipping box and packaging material. In the unlikely event you should need to ship the telescope back to Orion for warranty repair service, you should use the original packaging to ensure the telescope stays intact during shipping. Take a moment to inspect the telescope and all of its parts. Before proceeding with the instructions, refer to **Figure 1** to familiarize yourself with some of the features and components of the telescope.

Preparing the Telescope for Use

Placing the Telescope in the Tube Rings"

The 6" f/4 Newtonian Astrograph comes with a pair of hinged, felt-lined tube rings to hold the optical tube assembly (OTA) on a mount. Each ring has a flat boss on opposing sides. Both bosses have an M6 threaded hole in the center. Attach the tube rings to the dovetail mounting bar with the two socket head cap screws provided, using the included Allen wrench to tighten them **(Figure 2)**.

Then place the OTA in the open tube rings and clamp the rings closed. Not that the tube rings will need to be positioned so that the front ring is next to the focuser, for proper balance. You can rotate the tube inside the rings prior to tightening the tube ring clamp knobs to achieve the desired eyepiece or camera orientation.

The telescope has an extended length of optical tube in front of the focuser, compared to a standard Newtonian, to prevent any possibility of incoming light impinging directly on the secondary mirror or entering the focuser drawtube. This ensures the best possible contrast when observing and photographing faint celestial objects.

2" Dual-Speed Crayford Focuser

The 6" f/4 Newtonian Astrograph features an all-metal, 2" dual-speed (10:1) Crayford-type focuser **(Figure 3)** with a linear bearing rail for added stability. A steel reinforcing plate inside the optical tube just under the focuser provides extra rigidity, minimizing "flexing" of the focuser housing on the tube due to the weight and moment arm of your imaging camera.

If the drawtube slips under the weight of your imaging system or heavy visual accessories, tighten the drawtube tensioning thumbscrew on the underside of the focuser as needed. On the other hand if the focuser motion seems too stiff, loosen the drawtube tensioning thumbscrew a bit. Once focus is reached, you can lock the drawtube in place by tightening the focus lock knob on the top side of the focuser. The focuser drawtube has a 2" collar on the end of it, with two thumbscrews, for attachment of 2" accessories. The telescope comes with a 1.25" eyepiece holder inserted into the 2" collar that can be used with 1.25" eyepieces or accessories.

Fine Focus

The dual-speed, linear bearing Crayford focuser features both coarse and fine focusing wheels. The two large, silver-colored wheels are for coarse focusing. The small black wheel next to the large focus wheel on the right allows fine-focus adjustment at a gear ratio of 10:1, meaning ten turns of the fine focus wheel equals one turn of the large focus wheel. Use the large focus wheels to achieve rough focus on your target object, then use the fine focus wheel to home in on the exact focus point.

Attaching the Finder Scope

The included 8x50 crosshair finder scope is useful for locating objects in the sky and centering them in the main telescope's field of view. To install it, first remove the O-ring from the bracket and place it over the body of the finder scope until it seats in the narrow groove near the middle of the finder or is just behind it. Unthread the two black nylon alignment screws on the bracket until the screw ends are flush with the inside surface of the bracket. Slide the eyepiece end (narrow end) of the finder scope into the end of the bracket's cylinder opposite the alignment screws while pulling the chrome, spring-loaded tensioning pin on the bracket with your fingers **(Figure 4a).** Push the finder scope through the bracket until the O-ring seats just inside the front opening. Release the tensioner and tighten the two black nylon screws a couple of turns each to secure the finder scope in place. Now slide the foot of the finder scope bracket into the dovetail base on the main telescope. You'll first have to back out the thumbscrew lock on the dovetail base a few turns to allow the bracket to slide in. Once the bracket is inserted, tighten the thumbscrew lock **(Figure 4b)**.

Aligning the Finder Scope

The finder scope and the main telescope must be aligned so they point to exactly the same spot in the sky. Alignment is easiest to do in daylight. First, insert an eyepiece (a crosshair eyepiece is best) into the eyepiece holder in the telescope's focuser. Point the telescope at an object such as the top of a telephone pole or a street sign that is at least a quarter mile away. Move the telescope so the target object appears in the very center of the field of view when you look into the eyepiece. Now look through the finder scope. Is the object centered in the finder scope's field of view? If not, hopefully it will be visible somewhere in the field of view, so that only a minor adjustment of the finder scope's two alignment screws will be needed to center it. Otherwise you'll have to make coarser adjustments to redirect the aim of the finder scope.

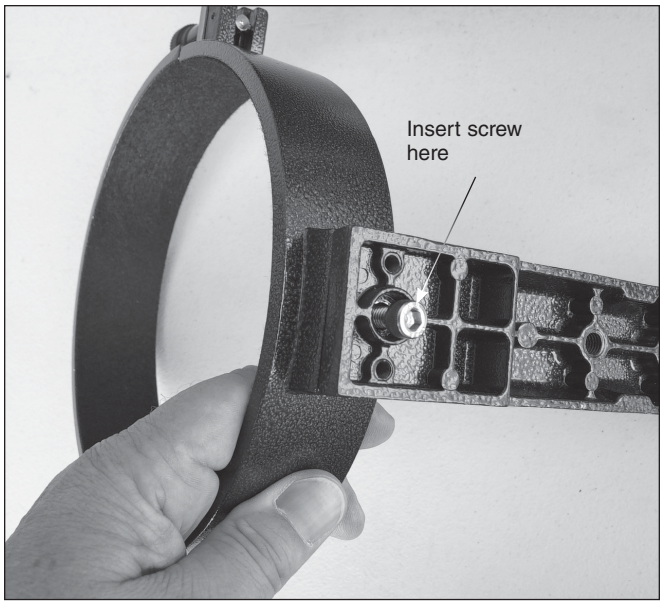

Figure 2. Attaching the dovetail mounting bar to the tube rings.

Once the target object is centered on the crosshairs of the finder scope, look again in the telescope's eyepiece and see if it is still centered there as well. If it isn't, repeat the entire process, making sure not to move the telescope while adjusting the alignment of the finder scope. When the target object is centered on the crosshairs of the finder scope and in the telescope's eyepiece, the finder scope is aligned and ready to be used for locating objects. The finder scope alignment should be checked before every imaging or observing session. This can easily be done at night, before viewing through the telescope. Choose any bright star or planet, center the object in the telescope eyepiece, and then adjust the bracket's alignment screws until the star or planet is also centered on the finder's crosshairs.

Focusing the Finder Scope

If the image in the finder scope appears out of focus, you will need to refocus the finder scope for your vision. First, loosen the knurled lock ring located behind the objective lens cell on the body of the finder scope **(see Figure 4a)**. Back the lock ring off by a few turns. Then refocus the finder scope on a distant object by rotating the objective lens cell clockwise or counterclockwise. Once the image appears sharp, retighten the knurled lock ring behind the objective lens cell. The finder scope's focus should not need to be adjusted again.

Operating the Telescope

Your Orion 6" f/4 Newtonian Astrograph is designed primarily for astro-imaging, but it makes a fine visual instrument as well (more about that later).

For imaging applications, the telescope is optimized for use with an APS-C or smaller size sensor. This instrument's parabolic primary mirror has a focal length of 610mm and a fast f/4 focal ratio. It produces bright images and allows short exposure times. Fast optics also inherently produce some coma, or distortion of star images toward the periphery of the field of view. Therefore, to achieve the best possible images, we highly recommend use of a coma corrector (sold separately) designed for use with f/4 Newtonians, or for a range of focal ratios that includes f/4. Many common coma correctors have a 2" diameter housing and T-threads for attachment to a camera. Typically, the coma corrector is attached to the front of the camera body via its T-threads (for DSLRs, to a compatible T-ring), then inserted into the 2" accessory collar of the focuser drawtube. Use of a coma corrector will allow you to utilize the entire imaging area of your camera without the need to crop the edges of your astro-images due to optical distortion. Check Orion's website for compatible coma correctors.

Attaching a DSLR Camera

To attach a DSLR camera, you will need the appropriate T-ring for the make and model of your camera. If using a coma corrector (highly recommended), thread it into the T-ring attached to your DSLR camera body, then insert the coma corrector housing into the focuser through the 2" accessory collar and tighten the two locking thumbscrews on the collar to secure the camera in place. If you do not plan to use a coma corrector, then you will need a prime focus camera adapter (available from Orion). Simply attach the T-ring to the camera body and thread the camera adapter into the T-ring. Then insert the barrel of the camera adapter into the focuser's 2" accessory collar and secure it with the two thumbscrew locks.

Attaching a CCD Camera

The 6" f/4 Newtonian Astrograph is equipped to accept CCD/CMOS astronomical cameras with either a 2" or 1.25" nosepiece, or a 2" coma corrector in place of the nosepiece, which slides directly into the telescope's focuser like an eyepiece. The 2" nosepiece is secured with the two thumbscrew locks. If your CCD imager does not include a compatible 2" nose-

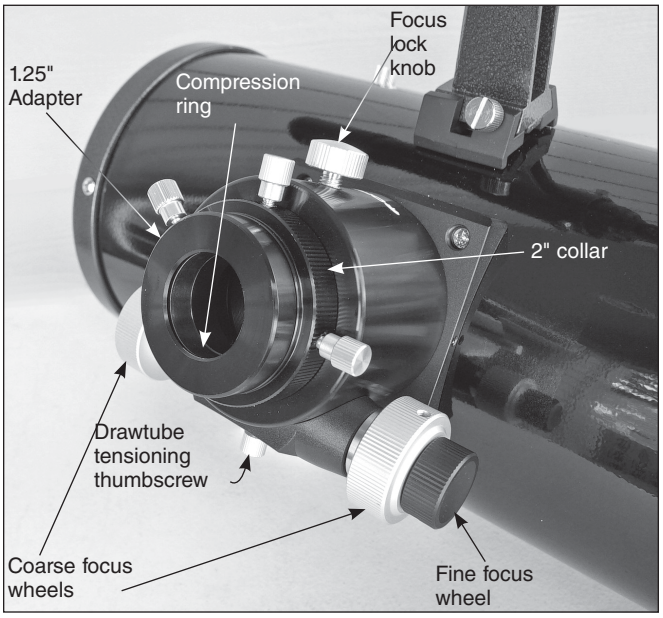

Figure 3. The aluminum 2" dual-speed linear bearing focuser.

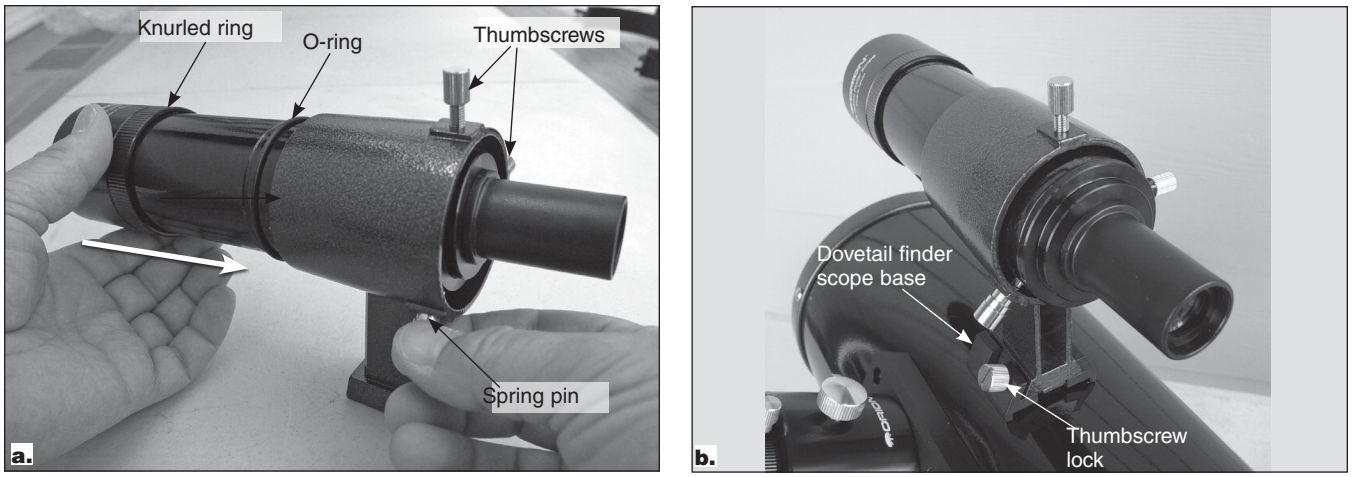

Figure 4. (a) Insert the finder scope into the bracket, then **(b)** install the bracket foot into the dovetail finder scope base and secure it with the thumbscrew lock.

piece, or if you wish to utilize the camera's T-threads without a coma corrector, a zero-profile prime focus camera adapter is required (available from Orion). The zero-profile adapter has male T-threads that couple to the female T-threads of your camera. Note that, depending on your CCD camera's specifications, you may need to insert the 2" extension adapter in front of the camera in order to achieve focus.

You may also need to add T-thread spacer rings between the coma corrector and the CCD camera, to achieve the necessary critical distance between the coma corrector's rear lens element and the camera's imaging sensor. Consult the manuals for your camera and the coma corrector to determine the spacing needed.

Observing with the 6" f/4 Newtonian Astrograph

The 6" f/4 Newtonian Astrograph is optimized for photographic imaging, but it can also be used for visual observing of celestial objects. (Because the field of view in a Newtonian reflector is rotated from right-side-up, this type of telescope is not recommended for terrestrial observing.) For visual use, we recommend using high-quality eyepieces to take full advantage of the instrument's excellent optical quality.

To achieve focus with most eyepieces for visual use, you will need to install the included 2" extension adapter in the focuser, then insert either a 2" or 1.25" eyepiece into the extension adapter. (If using a 1.25" eyepiece, you will need to insert the 1.25" adapter into the 2" extension adapter.) If you use a coma corrector that works for visual use (some work only for photography), you may not need the extension adapter to reach focus with your eyepiece(s).

Collimating the Optics (Aligning the Mirrors)

Collimating is the process of adjusting the mirrors so they are aligned with one another. Precise collimation of the optics is especially critical for fast Newtonian optics such as in the f/4 astrograph. If the mirrors are even slightly misaligned, image quality will suffer. Your telescope's optics were collimated at the factory, but it doesn't take much to knock them slightly out of alignment. So you should check the collimation before every observing or imaging session, to make sure it is dead on. The process of collimation is a relatively easy and can be done in daylight or darkness.

To check collimation, remove the eyepiece and look down the focuser drawtube, keeping your eye centered in the drawtube. You should see a reflection of the primary mirror (i.e., the big mirror at the bottom of the tube) and inside it a smaller reflection of the secondary mirror (i.e., the small diagonally oriented mirror under the focuser). The reflected image of the primary and secondary mirrors should be centered to one another, with your eye at the very center of the view. If the reflections do not look aligned, some adjustment will be needed, so you should proceed with the collimation procedure.

We strongly recommend the use of a laser collimating tool such as the Orion LaserMate Deluxe to aid in collimating the optics. A laser collimator will ensure a more precise collimation than you can achieve just by "eyeballing" it. With fast optics like those of the 6" f/4, getting a very precise collimation is critical for obtaining the sharpest, crispest images, so a laser collimator is a worthwhile (and small) investment.

The Primary Mirror Center Mark

You'll notice that the primary mirror of the 6" f/4.0 Newtonian Astrograph has a tiny ring (sticker) marking its center. This "center mark" allows you to achieve a very precise collimation of the primary mirror; you don't have to guess where the exact center of the mirror is.

NOTE: The center ring sticker need not ever be removed from the primary mirror. Because it lies directly in the shadow of the secondary mirror, its presence in no way adversely affects the optical performance of the telescope or the image quality. That might seem counterintuitive, but it's true!

Preparing the Telescope for Collimation

Once you get the hang of collimating, you will be able to do it quickly even in the dark. For now, it is best to collimate in day-

light, preferably in a brightly lit room and aimed at a white wall. It is recommended that the telescope tube be oriented horizontally. This will prevent any parts from the secondary mirror from falling down onto the primary mirror and causing damage if something comes loose while you are making adjustments.

Aligning the Secondary Mirror

To adjust the secondary mirror collimation, you will need a small Phillips screwdriver. If the entire primary mirror reflection is not visible in the secondary mirror, as in **Figure 5b**, you will need to adjust the tilt of the secondary mirror. First, loosen one of the three alignment set screws by, say, a half turn, and then lightly tighten the other two to take up the slack **(Figure 6**). Do not loosen the center screw during this process. The goal is to center the primary mirror reflection in the secondary mirror, as in **Figure 5c.** Did the primary mirror reflection move closer to being centered in the secondary mirror? If so, continue loosening the same setscrew and tightening the other two. But if the primary mirror reflection moved in a direction other than toward the center, then you should try loosening a different setscrew and tightening the other two. It takes some trial and error with loosening one setscrew and tightening the others to get the primary mirror reflection centered in the secondary mirror.

When it is centered, you're done adjusting the secondary mirror. Don't worry that the reflection of the secondary mirror (the small circle with the four spider vanes adjoining it and with your eye's reflection inside it) is off-center, since that adjustment is made when aligning the primary mirror in the next step.

Aligning the Primary Mirror

The primary mirror will need adjustment if, as in **Figure 5c**, the reflection of the primary mirror is centered in the secondary mirror, but the reflection of the secondary mirror is off-center.

The tilt of the primary mirror is adjusted with three large collimation knobs on the rear end of the optical tube (bottom of the primary mirror cell), shown in **Figure 7**. The thinner knobs are lock knobs, which secure the mirror in place once the correct tilt has been achieved.

To adjust the primary mirror's tilt, first loosen all three lock knobs a couple of counterclockwise turns each. Now, while looking into the focuser, turn one of the collimation knobs (which are spring loaded) a half turn or so in either direction and see if the secondary mirror reflection moves closer to the center of the primary. If it does, great, keep going until you get it as close as you can. If it doesn't, try turning the collimation knob in the opposite direction. If turning the one knob does not seem to do the trick, try adjusting one of the other large knobs. Again, it will take some trial-and-error using all three large collimation knobs to properly align the primary mirror. Over time you will get the feel for which collimation screws to turn to move the image in a given direction.

When you have the secondary mirror reflection centered as much as possible in the primary mirror's reflection, your primary mirror is collimated. Now lightly tighten the three lock knobs to secure the primary mirror in place.

The view down the focuser should now resemble **Figure 5a**. A simple star test will indicate how well the telescope optics are collimated.

For a more complete description of the collimation procedure, see our article Collimation of a Newtonian Reflector Telescope in the support materials for this telescope on our website.

Star-Testing the Telescope

When it is dark, point the telescope at a bright star and accurately center it in the eyepiece's field of view. (To achieve focus with an eyepiece, you will likely have to use the included 35mm extension adapter, as described previously.) Slowly de-focus the image with the focusing knob. If the telescope is correctly collimated, the expanding disk should be a perfect circle **(Figure 8)**. If the image is unsymmetrical, the scope is out of collimation. The dark shadow cast by the secondary mirror should appear in the very center of the out-of-focus circle, like the hole in a donut. If the "hole" appears off-center, the telescope is out of collimation.

If you try the star test and the bright star you have selected is not accurately centered in the eyepiece, the optics will always appear out of collimation, even though they may be perfectly aligned. It is critical to keep the star centered, so over time you

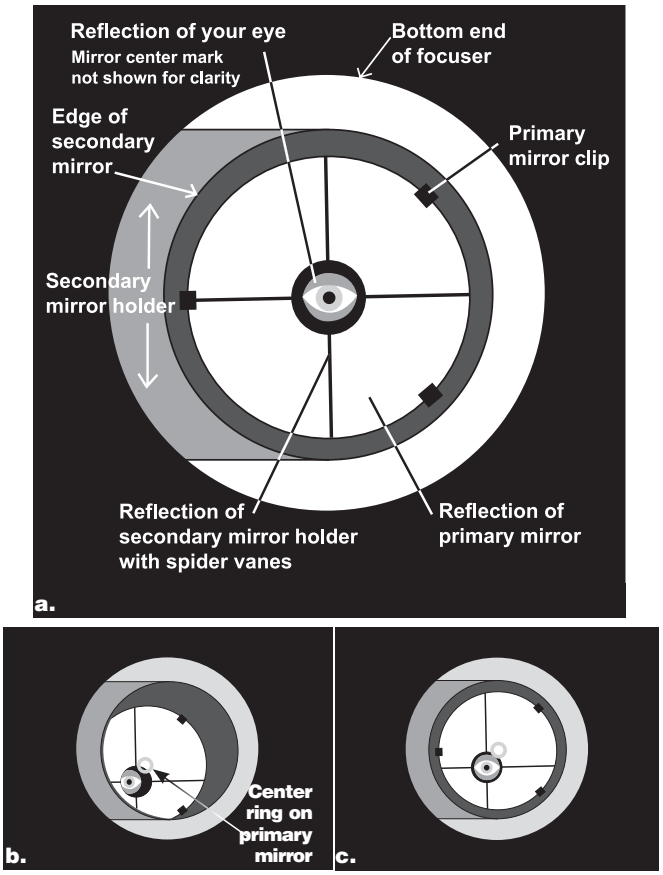

Figure 5. Collimating the optics. **(a)** When the mirrors are properly aligned, the view down the focuser drawtube should look like this. **(b)** Here, the secondary mirror is centered under the focuser, but it needs to be adjusted (tilted) so that the entire primary mirror is visible. **(c)** The secondary mirror is correctly aligned, but the primary mirror still needs adjustment.

will need to make slight corrections to the telescope's position in order to account for the sky's apparent motion. Point the telescope at Polaris (the North Star) if you do not have a mount that tracks.

Care & Maintenance

Give your telescope reasonable care and it will last a lifetime. When not in use, keep its dust cover on as well as the dust cap on the eyepiece opening. Store the telescope indoors or in a dry garage. Do not leave the telescope outside except when using it. The optical tube is made from rolled steel and has a smooth enamel surface. If a scratch appears on the tube, it will not harm the telescope. Smudges on the tube can be wiped off with standard household cleaners such as Windex or Formula 409.

In general, your telescope's mirrors will only need to be cleaned very infrequently, if ever. Covering the front opening of the telescope with the dust cover when it is not in use will prevent dust from accumulating on the mirrors. Keeping the dust cap on the focuser's 1.25" opening is also a good idea. Improper cleaning can scratch the mirror coatings, so the fewer times you have to clean the mirrors, the better. Small specks of dust or flecks of paint have virtually no effect on the visual or imaging performance of the telescope, so leave them be!

You should not have to remove the secondary mirror from the telescope to lightly clean it. Just reach in carefully and brush the surface lightly with a camel hair brush or blow off dust with a photographer's blower bulb. Do not use "canned air" on any telescope optics as the propellants can leave residue and stains on the mirror.

Do not attempt to remove the primary mirror cell from the telescope tube. There are small nuts on the inside end of the small screws that attach the mirror cell to the tube. They will come off if the screws are loosened and are impossible to get back on without removing the entire secondary mirror support! If you believe the primary mirror needs cleaning, call Orion Tech Support for further direction.

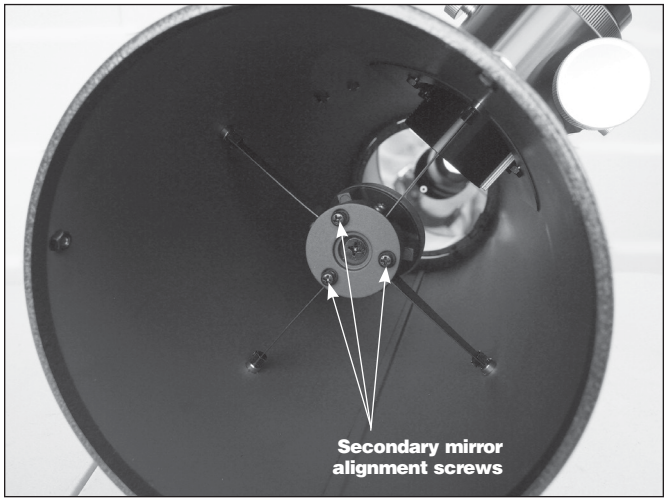

Figure 6. Adjust the secondary mirror tilt with the three Phillips screws on the secondary mirror holder. Always start by loosening one screw before lightly tightening one or both of the others.

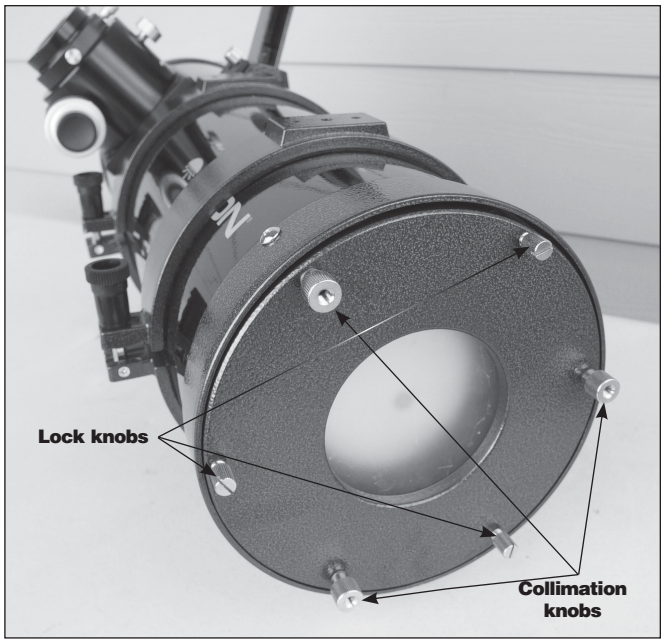

Figure 7. The larger, spring-loaded collimation knobs are used to adjust the primary mirror tilt, while the thinner knobs lock the mirror in place. Loosen each lock knobs a couple turn before adjusting the collimation knobs.

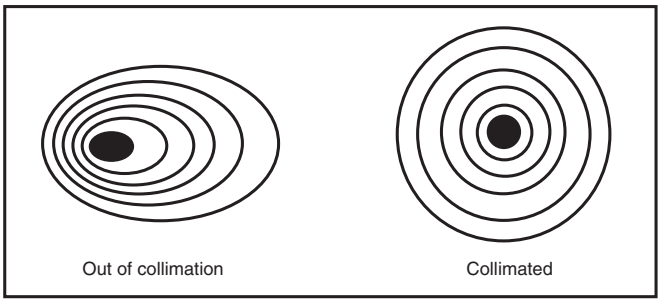

Figure 8. A star test will determine if the telescope's optics are properly collimated. A defocused view of a bright star through the eyepiece should appear as illustrated on the right if the optics are perfectly collimated. If the circle is unsymmetrical, as illustrated on the left, the optics need alignment.

Specifications

Optical configuration:	Newtonian reflector
Aperture:	150mm
Focal length:	610mm
Focal ratio:	f/4
Primary mirror:	BK7 glass, parabolic figure
Mirror coatings:	Enhanced aluminum (94% reflectivity) with SiO2 overcoat
Secondary mirror minor axis:	62.5mm
Backfocus distance:	77.1mm
Focuser: Dual-speed	(10:1) 2" linear bearing Crayford, with 1.25" adapter
Optical tube:	Rolled steel, gloss black enamel finish
Tube rings:	Included, hinged, felt-lined
Finder Scope:	8x50, with dovetail bracket
2" Extension adapter:	35mm extension length
Weight:	12.7 lbs. (5.75 kg) – including finder scope, tube rings, and dovetail mounting bar
Length:	22.5" (580mm)

One-Year Limited Warranty

This Orion product is warranted against defects in materials or workmanship for a period of one year from the date of purchase. This warranty is for the benefit of the original retail purchaser only. During this warranty period Orion Telescopes & Binoculars will repair or replace, at Orion's option, any warranted instrument that proves to be defective, provided it is returned postage paid. Proof of purchase (such as a copy of the original receipt) is required. This warranty is only valid in the country of purchase.

This warranty does not apply if, in Orion's judgment, the instrument has been abused, mishandled, or modified, nor does it apply to normal wear and tear. This warranty gives you specific legal rights. It is not intended to remove or restrict your other legal rights under applicable local consumer law; your state or national statutory consumer rights governing the sale of consumer goods remain fully applicable.

For further warranty information, please visit www.OrionTelescopes.com/warranty.

ORION
TELESCOPES & BINOCULARS
AN EMPLOYEE-OWNED COMPANY

Corporate Offices: 89 Hangar Way, Watsonville CA 95076 - USA
Toll Free USA & Canada: (800) 447-1001
International: +1(831) 763-7000
Customer Support: support@telescope.com